C-TEK T-FLASH TO SD ADAPTER

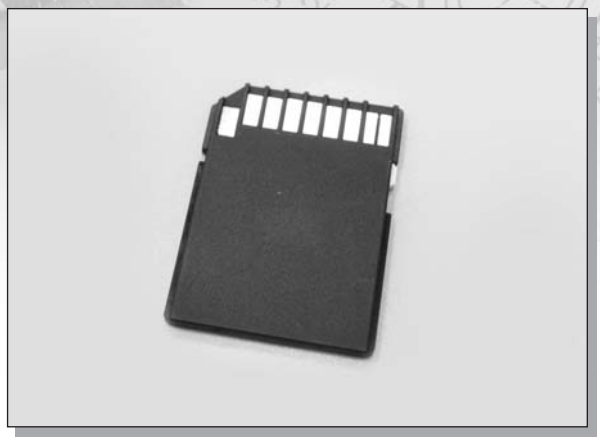

MATERIAL:

HOUSING : THERMOPLASTIC (UL 94V-0).

CONTACT : PHOSPHOR BRONZE.

DIMENSIONS

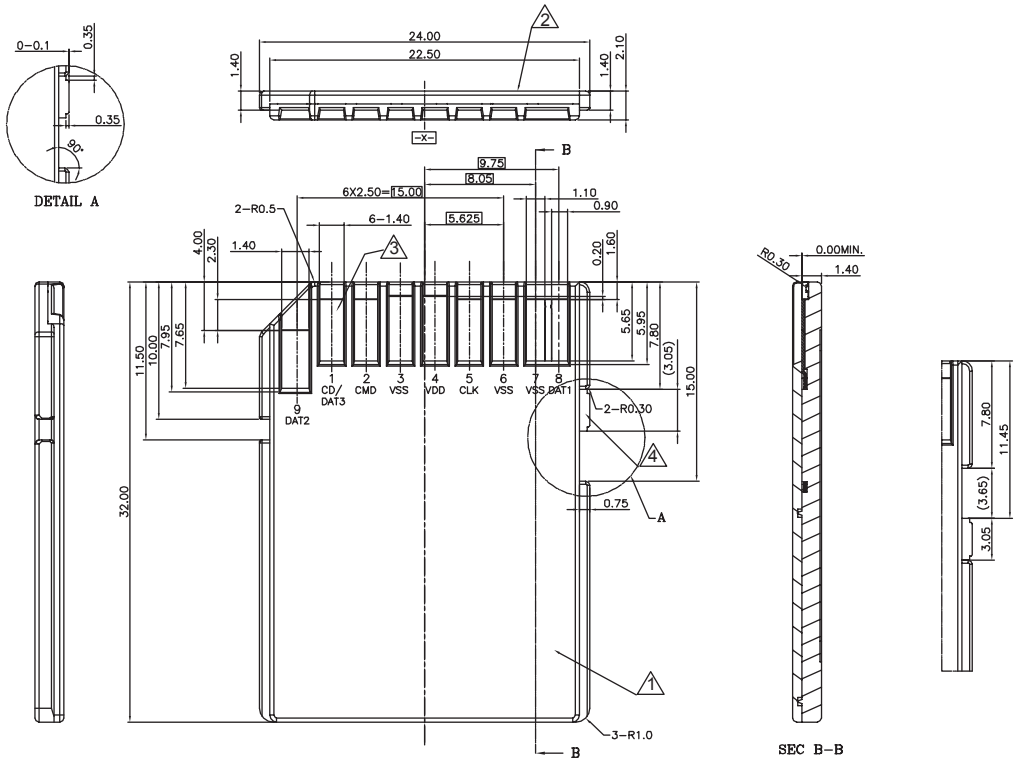

HOW TO ORDER

	SERIES NO.	COLOR	PLATING	
	8010	B	S	
		B: BLACK	S: SELECTIVE GOLD PLATED S1: SELECTIVE GOLD 15u" S2: SELECTIVE GOLD 30u"	